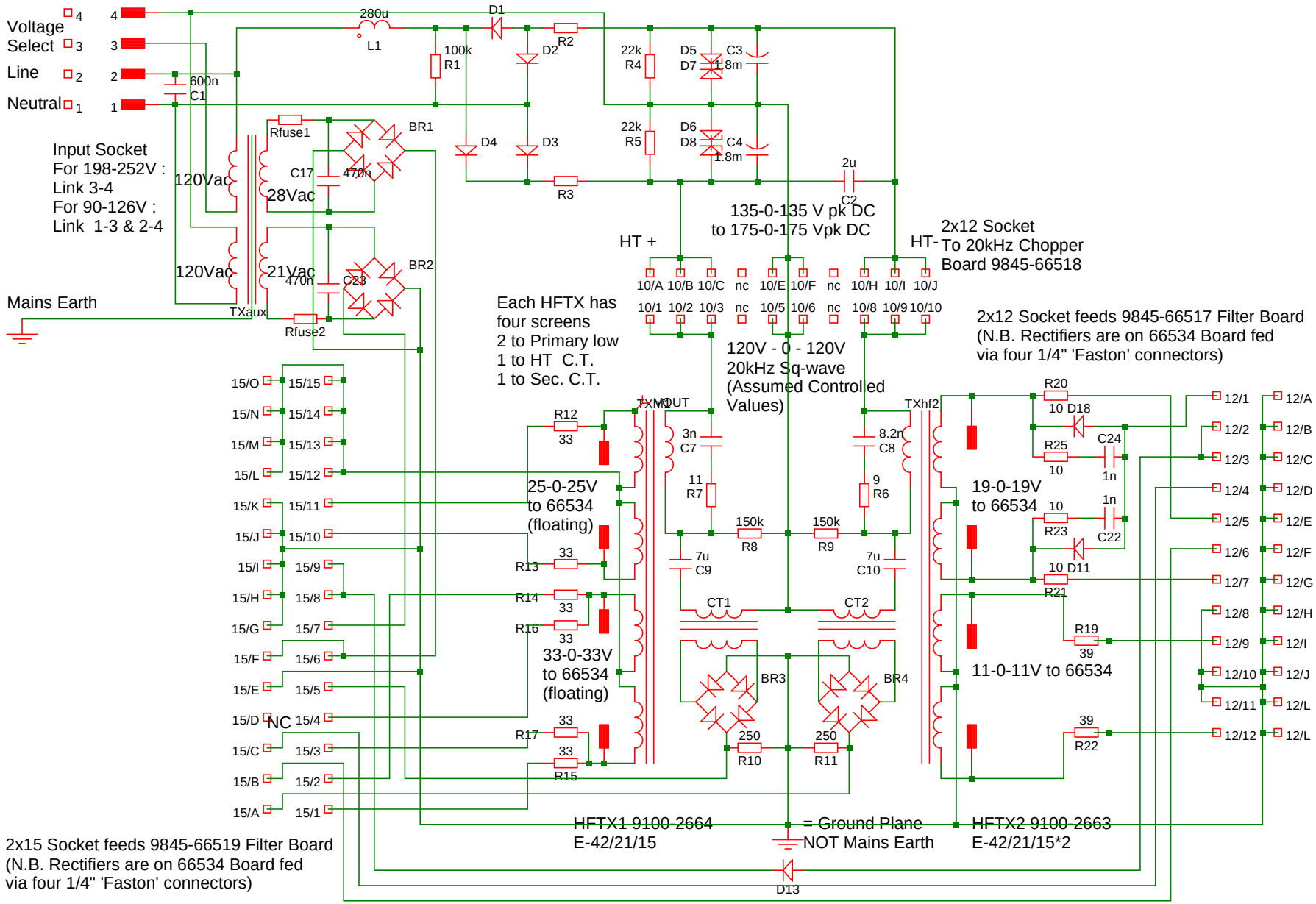


HP 9845-66520 Input Power Board

C:\Documents and Settings\Martin A Cragg\My Documents\My Circuits\Simetrix\HP9845\9845-66520-2.sxsch - 01/05/2005