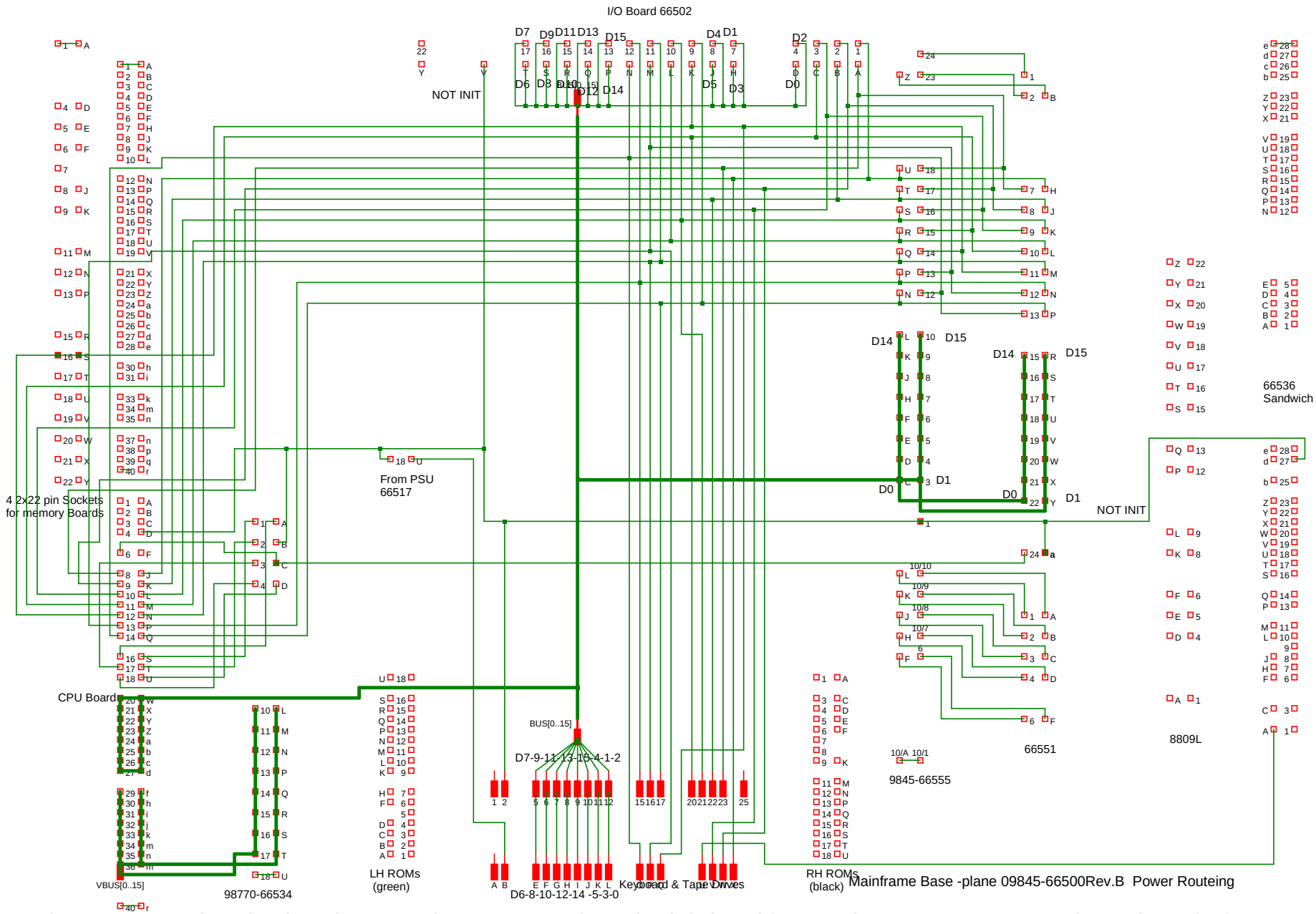

C:\Documents and Settings\Martin A Cragg\My Documents\My Circuits\Simetrix\HP9845\9845-66500B_I-O_Logic.sxsch - 01/05/2005